DWG. ISSUE	PART REV.	REVISION BLOCK					
		ECO NO.	DESCRIPTION	DR.	DATE	CK.	DATE
1	A			E.R.	2/2/04		

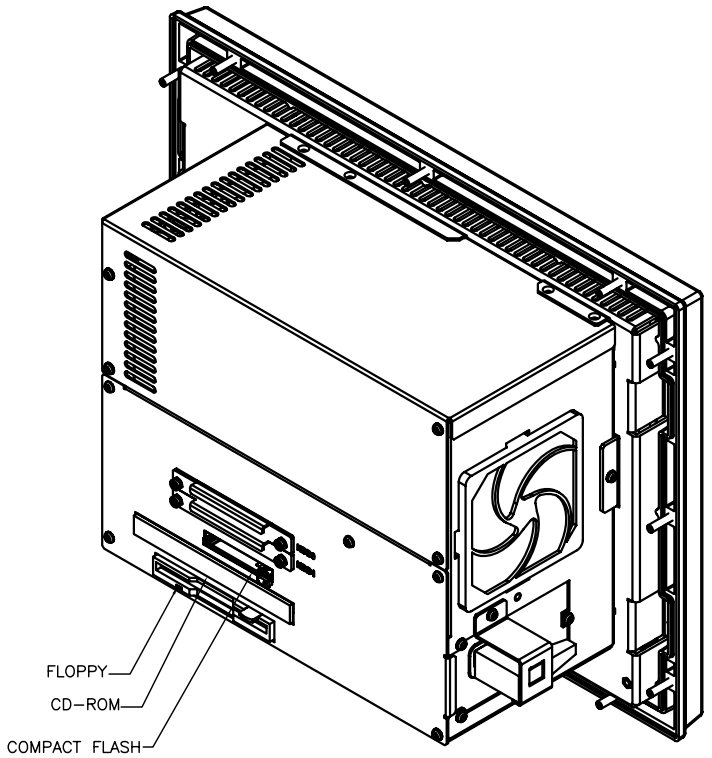

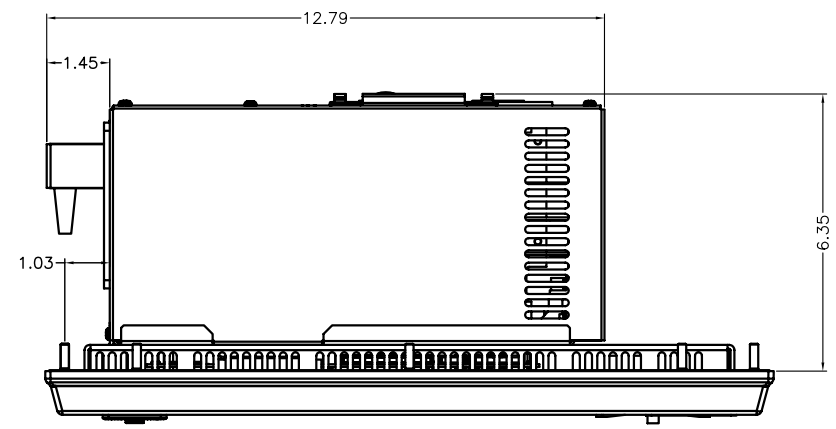

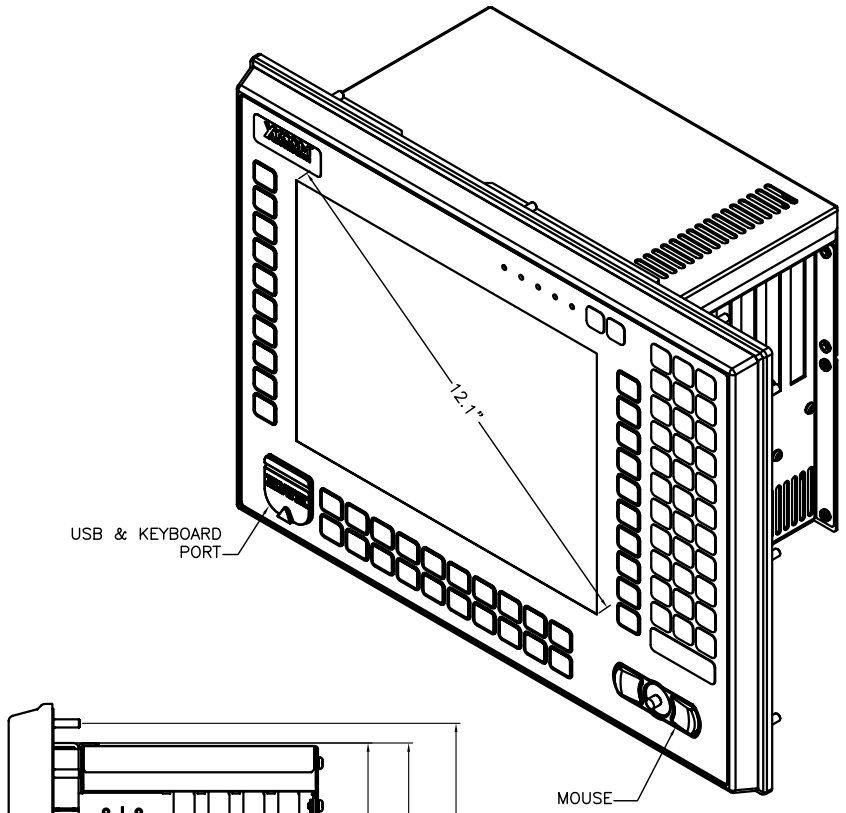

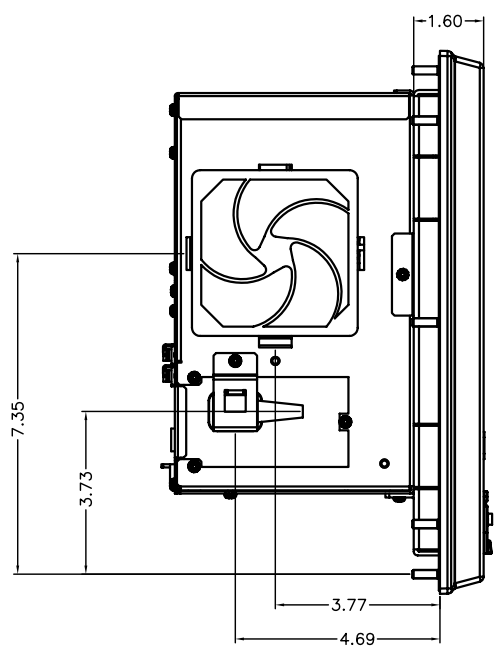

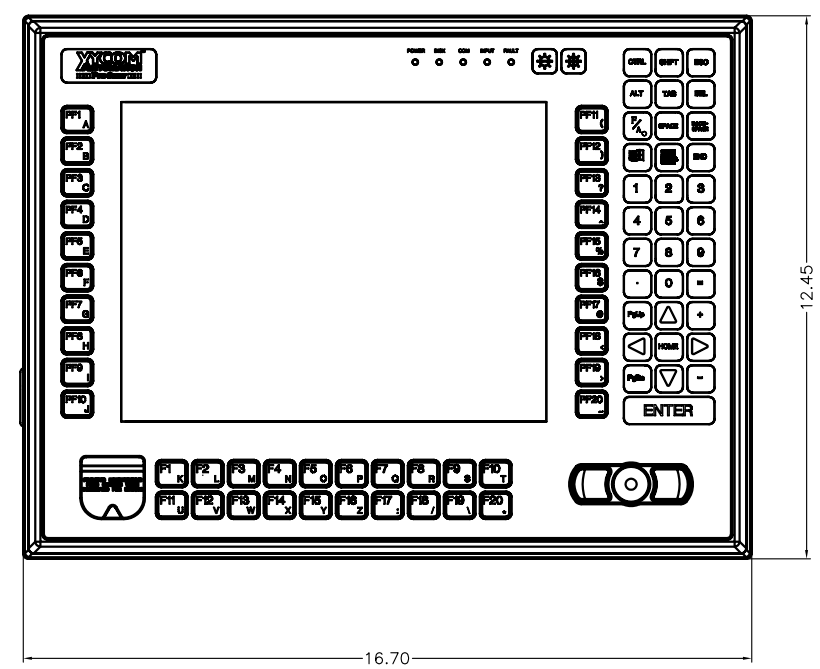

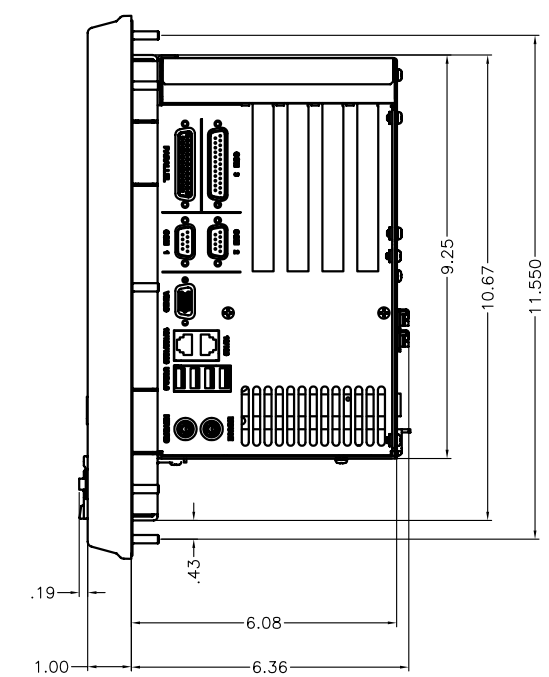

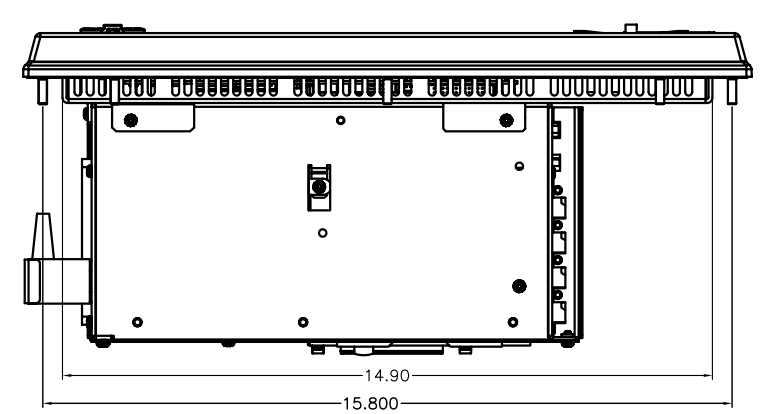

FOR REFERENCE ONLY

THIRD ANGLE PROJECTION

						SIGNATURES
DR		ME	EE	QC/QA	MFG.	REVISION A RELEASE
CK		E.ROYTMAN				

INTERNAL USE ONLY: SPEC. / SCH. / PARTS NEED ENGINEERING

ASSOCIATED DRAWINGS

TOLERANCES
UNLESS OTHERWISE SPECIFIED ALL DIMENSIONS ARE
XXX" DIMS ±
X PLACE 0.1
XX PLACE 0.02
XXX PLACE 0.010
HOLE DIA. 0.005
±0.5°

THESE DRAWINGS ARE THE PROPERTY OF XYCOM AND SHALL NOT BE REPRODUCED OR COPIED WITHOUT EXPRESSED WRITTEN AUTHORIZATION FROM XYCOM.

XYCOM AUTOMATION™
750 N. MAPLE RD.
SALINE, MI. 48176

TITLE:
GENERAL LAYOUT
4612KPM(T)

SCALE: FULL
SHEET 1 OF 1
DWG. NO. 144616