DWG. ISSUE	PART REV.	REVISION BLOCK					
		ECO NO.	DESCRIPTION	DR.	DATE	CK.	DATE
1	A			E.R.	1/21/03		

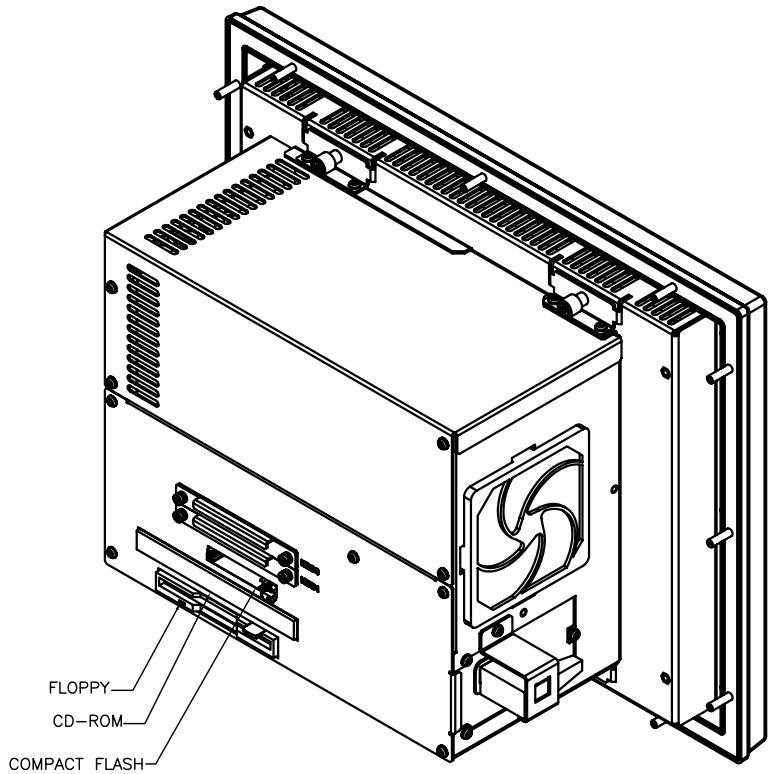

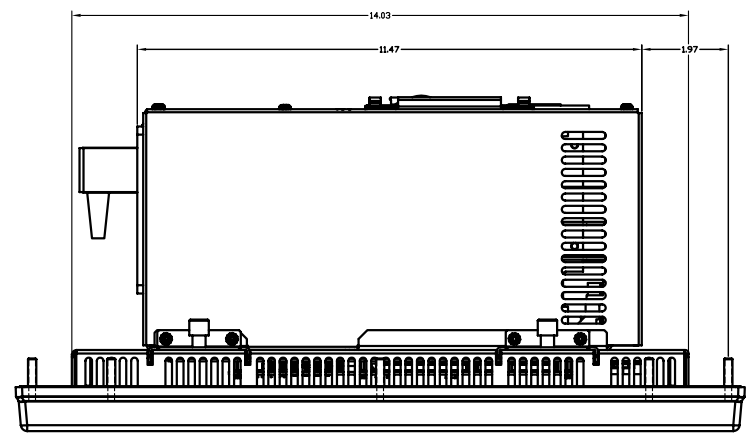

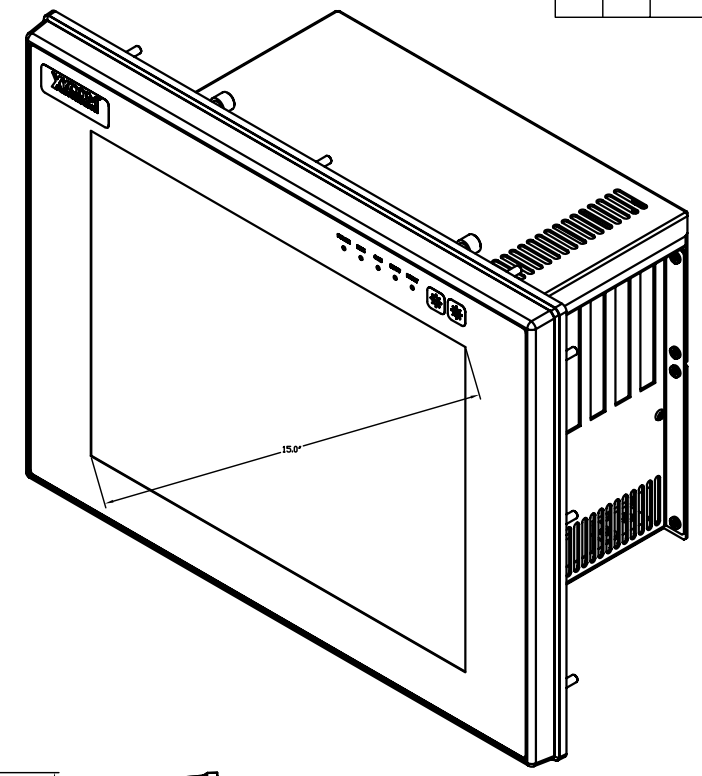

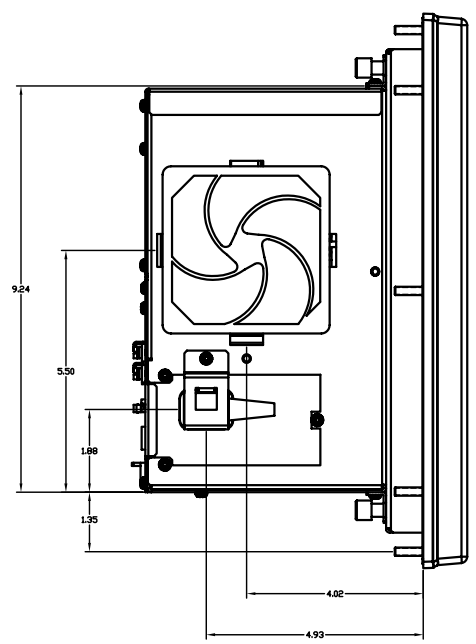

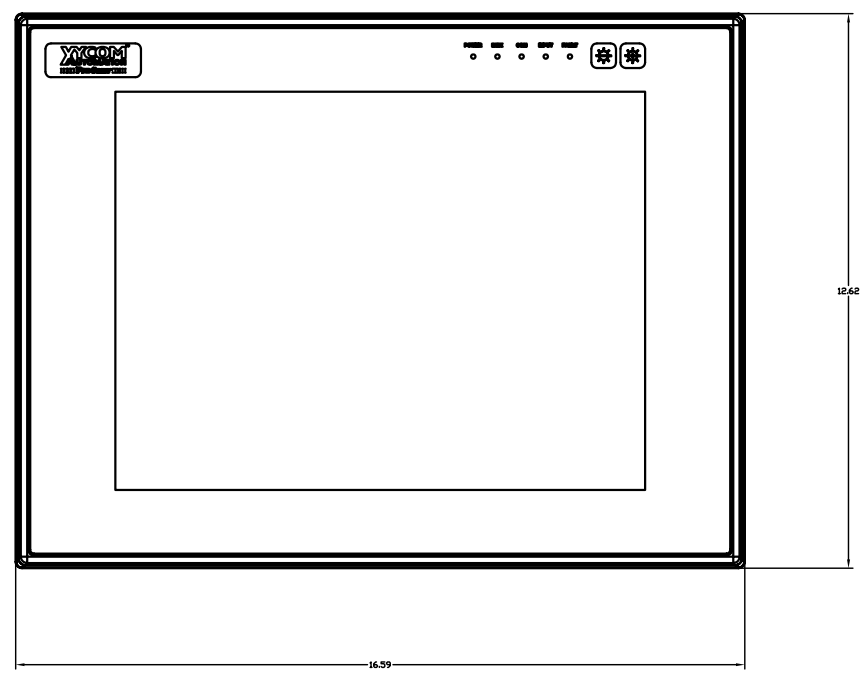

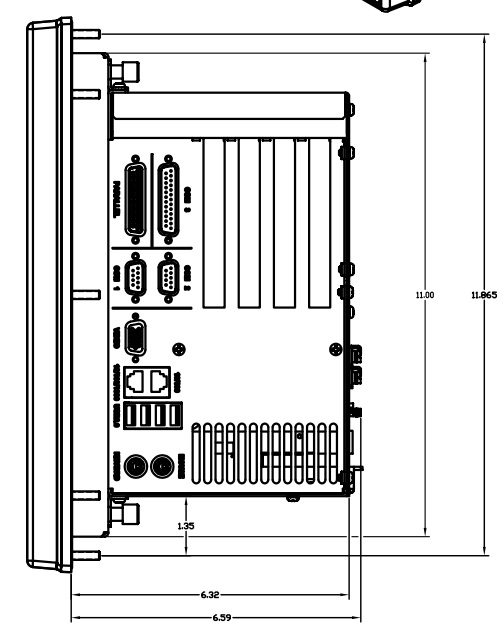

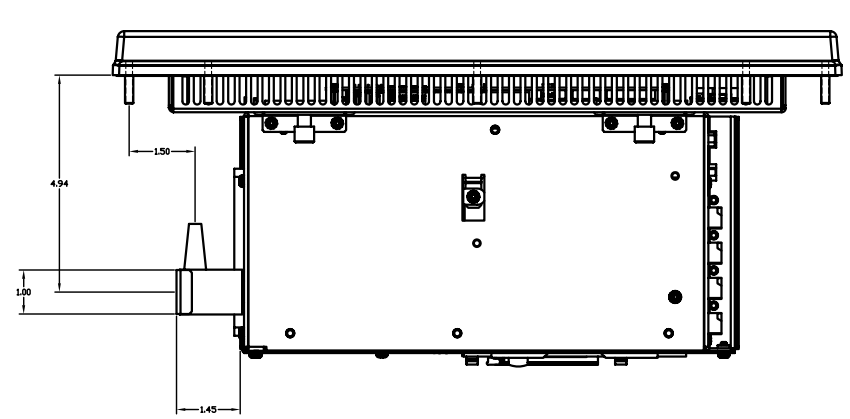

FOR REFERENCE ONLY

THIRD ANGLE PROJECTION

							SIGNATURES
	DR E.ROYTMAN	ME E.ROYTMAN	EE	QC/QA	MFG.		REVISION A RELEASE
	CK						

INTERNAL USE ONLY — SPEC. — SCH. — FIRST USED ON MODEL — ASSOCIATED DRAWINGS

TOLERANCES
UNLESS OTHERWISE SPECIFIED ALL DIMENSIONS ARE
.XXX" (MM)
X PLACE ±.1
.XX PLACE ±.02
.XXX PLACE ±.010
HOLE DIA. ±.005
∠ ±0.5°

XYCOM AUTOMATION™ 750 N. MAPLE RD. SALINE, MI. 48176

TITLE: GENERAL LAYOUT 4615T

THESE DRAWINGS ARE THE PROPERTY OF XYCOM AND SHALL NOT BE REPRODUCED OR COPIED WITHOUT EXPRESSED WRITTEN AUTHORIZATION FROM XYCOM.

SCALE FULL — SHEET 1 OF 1 — DWG. NO. 144632